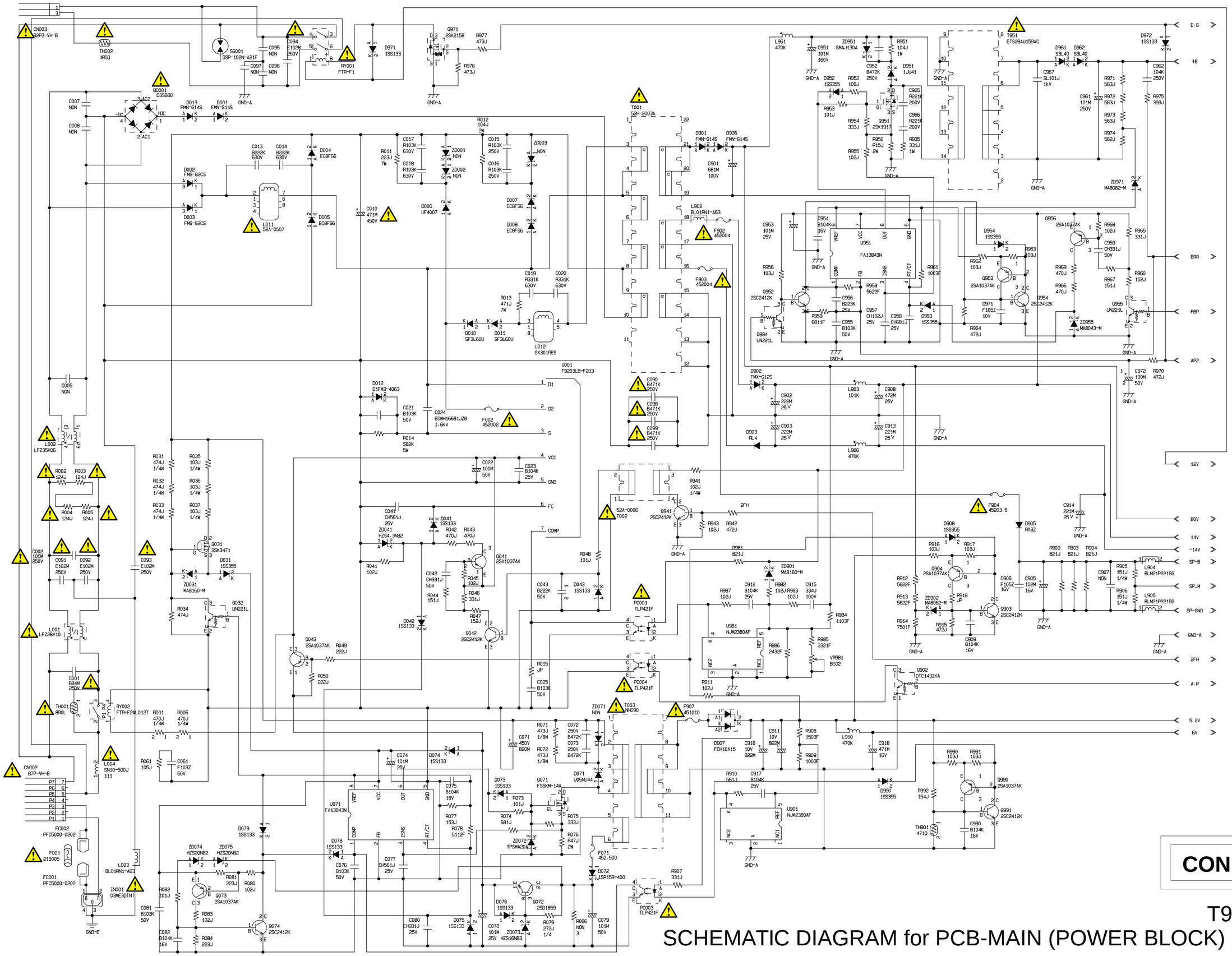

CONFIDENTIAL

T966 (MA-21D5)

SCHEMATIC DIAGRAM for PCB-MAIN (POWER BLOCK) (5B90092) 2/2